Electrical network protection

Sepam series 10

Digital protection relays

Catalogue
2008

Schneider Electric

Contents

Sepam protection relays, the product of experience

PE50773_SE

Sepam, a complete range of protection relays.

A complete range for many different needs

Protection relays constantly monitor the power network and trip the circuit breakers to isolate the faulty portion under fault conditions: overload, short-circuit, insulation fault.
The Sepam range of protection relays is designed for all protection applications in medium-voltage public and industrial distribution networks.
It is made up of four series of relays with increasing performance levels:
- Sepam series 10 for simple applications.
- Sepam series 20 for usual applications.
- Sepam series 40 for demanding applications.
- Sepam series 80 for custom applications.

A multi-functional range of digital relays

Each Sepam series offers all the functions required for the intended application:
- effective protection of life and property
- accurate measurements and detailed diagnosis
- integral equipment control
- local or remote indications and operation.

A Sepam solution for every application

For each electrotechnical application, Sepam offers the relay suited to the protection needs of your network:
- substations (incomer or feeder type)
- transformers
- motors
- generators
- busbars
- capacitors.

Schneider Electric, a global offer

World leader in power & control
Schneider Electric makes electricity safe, as well as facilitating and improving its use.

Worldwide presence
Schneider Electric contributes to customer performance through its unique selection of products, solutions and services, as well as its dynamic policy of innovation.

Over 13 000 points of sale and 205 factories in 190 countries
You can be sure of finding the range of products meeting your needs and complying perfectly with local standards.
Our technicians are always on hand to provide solutions tailored to your needs and all the technical assistance you may require.

PE50528

Schneider Electric, by your side in over 190 countries.

Schneider Electric, vast experience in protection relays

Breaking new ground back in 1982, Merlin Gerin launched Sepam, the first multi-functional, digital protection relay. Today, with the extended Sepam range (series 10, 20, 40 and 80), you benefit from over 30 years of experience on the part of the Schneider Electric R&D teams.
More than 400 000 Sepam relays have been installed in over 130 countries and in every sector of activity:
- energy production and distribution
- infrastructure: airports, tunnels, public transportation, water treatment
- industry: automobile, mines, semiconductors, metallurgy, petrochemicals
- commercial sector: shopping centres, hospitals.

Sepam for reliability and quality, from design on through to operation

- Design based on dependability studies, complying with the functional-safety requirements of standard IEC 61508.
- Product development and manufacturing certified ISO 9001.
- Environmentally friendly manufacturing certified ISO 14001.
- Service quality ensured by decentralized logistics and support
- Compliance with international standards and local certification.

Panorama of Sepam applications

The selection guide proposes the types of Sepam suited to your protection needs.

Sepam series 10

For simple applications


PB103452-SE_32

Characteristics
- 4 logic inputs
- 7 relay outputs
- 1 communication port

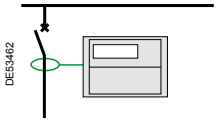
DE53462

Sepam series 20

For usual applications


PE50465_SE

Characteristics
- 10 logic inputs
- 8 relay outputs
- 1 communication port
- 8 temperature-sensor inputs

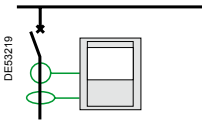
DE53219

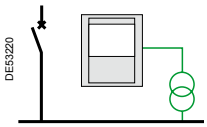
DE53220

Sepam series 40

For demanding applications


PE50465_SE

Characteristics
- 10 logic inputs
- 8 relay outputs
- logical-equation editor
- 1 communication port
- 16 temperature-sensor inputs

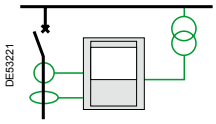
DE53221

Sepam series 80

For custom applications


PE50463_SE


PE50464_SE

Characteristics
- 42 logic inputs
- 23 relay outputs
- logical-equation editor
- 2 communication ports for multi-master or redundant architectures
- 16 temperature-sensor inputs
- removable memory cartridge containing settings and parameters for rapid return to service
- user-machine interface with mimic for local control in complete safety
- optional Logipam programming software for specific functions

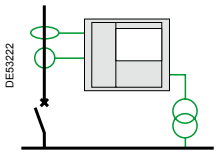
DE53222

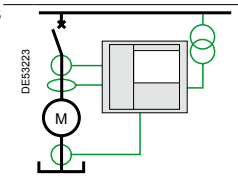

DE53223

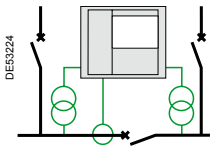
DE53224

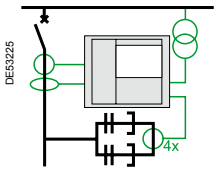

DE53225

Panorama of Sepam applications

Protection functions		Applications					
basic	specific	Substation	Busbars	Transformer	Motor	Generator	Capacitor
phase-overcurrent and earth-fault protection		Series 10 A Series 10 B		Series 10 A Series 10 B Series 10 N			
current		S20		T20	M20		
	breaker failure	S23		T23			
voltage and frequency			B21				
	disconnection by "rate of change of frequency"		B22				
current, voltage and frequency		S40		T40		G40	
	directional earth fault	S41			M41		
	directional earth fault and phase overcurrent	S42		T42			
current, voltage and frequency		S80	B80				
	directional earth fault	S81		T81	M81		
	directional earth fault and phase overcurrent	S82		T82		G82	
	disconnection by "rate of change of frequency"	S84					
current, voltage and frequency	transformer or transformer-machine differential			T87	M88	G88	
	machine differential				M87	G87	
current, voltage and frequency	voltage and frequency protection for two sets of busbars		B83				
current, voltage and frequency	capacitor-bank unbalance						C86

Presentation of Sepam series 10

PB103446_SE

Sepam series 10.

Sepam series 10 is a high-quality protection relay that represents the most cost-effective solution available for essential protection functions. Highly ergonomic, it is easy to install and set up.

Sepam series 10 specifics

Sepam series 10 monitors phase and/or earth-fault currents. Three models meet a wide range of different needs :

■ **N**: Sepam series 10 N protects against earth faults

■ **B**: Sepam series 10 B protects against overloads, phase-to-phase faults and earth faults

■ **A**: Sepam series 10 A provides the same functions as Sepam series 10 B, with also a communication port, more inputs and outputs, and additional protection and monitoring functions.

Simplicity

■ **easy operation** - screen, keys, pictograms, etc., good ergonomics

■ **fast set-up** - installation, wiring, parameter setting directly on the relay without a PC

■ **easy stock management** - a single box, no accessories.

Reliability

■ **guaranteed protection of life and property** - high-quality product, compliance with standards, continuous self-test

■ **safety of operating personnel** - all accessible parts are made of insulating materials, light and compact product with no sharp edges

■ **environmentally friendly** - compliance with the European RoHS directive, low energy consumption, manufacture in factory certified ISO 14001 and recyclable to more than 85%.

Productivity

■ **attractive, cost-effective product** - easy to understand, no unnecessary complications, suited to user needs

■ **improved availability of electricity** - precise tripping set points and times, logic discrimination, detailed information made spontaneously available to operator following tripping.

■ **reduced maintenance costs** - continuous self-tests to extend periods between maintenance.

Functions		ANSI code	Sepam series 10 N	B	A
Protections					
Earth-fault protection	Standard	50N/51N	□	□	□
	Sensitive			□	□
	High sensitivity		□	□	□
Phase-overcurrent protection		50/51		■	■
Thermal overload protection		49RMS		■	■
Phase-overcurrent and earth fault protection cold load pick-up				■	■
Logic discrimination	blocking send	68	■	■	■
	blocking reception				■
External tripping					■
Measurements					
Earth-fault current			■	■	■
Phase currents				■	■
Peak demand currents				■	■
Control and supervision					
Circuit breaker tripping and lockout		86	■	■	■
Tripping indication			■	■	■
Trip-circuit supervision					■
Remote circuit-breaker control					■
Record of last fault			■	■	
Record of last five events					■
Communication					
Modbus					■
IEC 60870-5-103					■
Inputs/Outputs (number)					
Earth-fault current inputs			1	1	1
Phase-current inputs			-	2 or 3	3
Logic relay outputs			3	3	7
Logic inputs			-	-	4
Communication port			-	-	1

■ *Function available.*

□ *Function availability depends on the Sepam model.*

Sepam series 10 applications

Protection applications

The primary applications for Sepam series 10 are:
- protection of secondary distribution networks (MV/MV and MV/LV substations)
- protection of buildings supplied with medium voltage (MV), including office buildings, shopping centres, industrial buildings, warehouses, etc.
- protection of low-voltage networks by tripping a Masterpact NW circuit breaker not equipped with a Micrologic control unit.

Power system protections

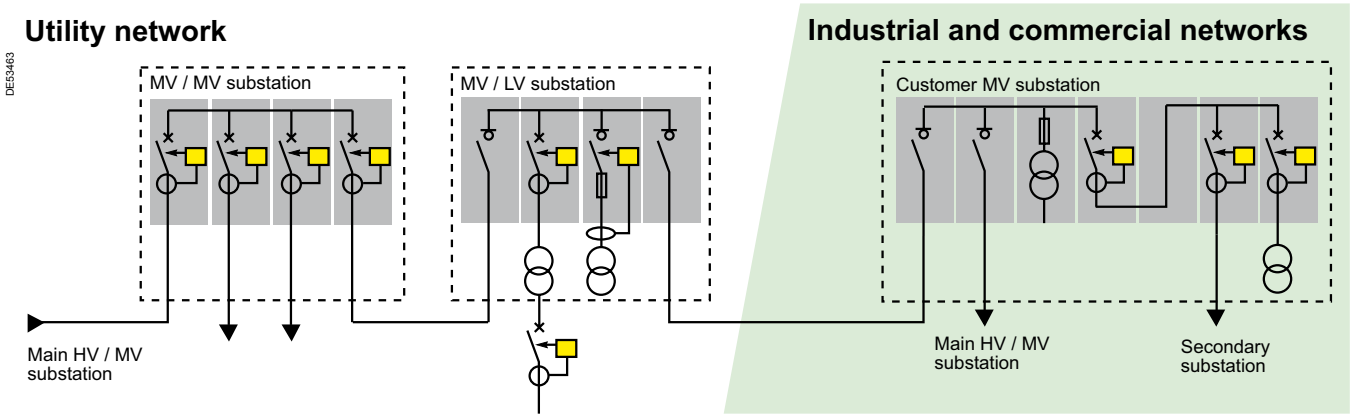

Integration in a remote-control system

To manage MV substations, Sepam protection relays can be connected to Easergy T200I remote-control and monitoring interfaces (RTU) for operation with PowerLogic power-monitoring units and Flair fault detectors.
This flexible solution includes a number of functions:
- protection of incoming and outgoing circuits
- detection of fault currents
- switch management
- database containing event logs and measurements
- backed-up power supply
- communication via SCADA
- local and remote access via a web server.

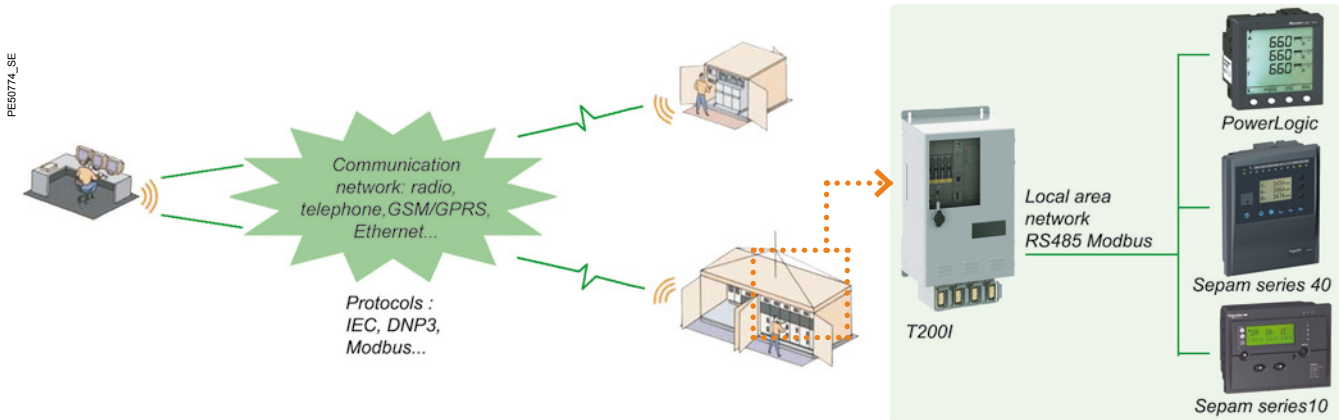

Protection functions

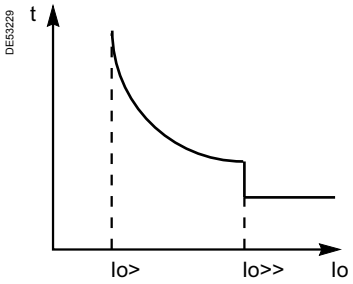

Earth-fault protection (ANSI 50N-51N)

Earth-fault protection detects overcurrents caused by phase-to-earth faults. It uses measurements of the fundamental component of the earth-fault current.

2 independent set points (Io> and Io>>)

■ the low set point (Io>) offers definite time (DT) or IDMT settings with various types of standardized curves (IEC, IEEE, RI) and it is possible to enable an IDMT timer hold.

■ the high set point (Io>>) offers only the definite time (DT) setting. The minimum setting results in instantaneous operation (ANSI 50).

Depending on the required level of sensitivity, there are three types of Sepam relays.

Sensitivity	Sensor	Setting range
Standard	3 phase CTs or 1 earth-fault protection CT, with rated primary current Ino	0.1...24 Ino
Sensitive (1)	3 phase CTs or 1 earth-fault protection CT, with rated primary current Ino	0.01...2.4 Ino
High sensitivity	Special core balance CSH or GO, with ratio of 470/1	0.2...240 A primary, i.e. 0.0004...0.5 Ino

***(1)** Setting not available with Sepam series 10N.*

Phase-overcurrent protection (ANSI 50-51)

Phase-overcurrent protection detects overcurrents caused by phase-to-phase faults. It uses the measurements of the fundamental component of currents drawn from two or three phase CTs, with a secondary rating of 1 A or 5 A.

2 independent set points (I> and I>>)

■ the low set point (I>) offers definite time (DT) or IDMT settings with various types of standardized curves (IEC, IEEE, RI) and it is possible to enable an IDMT timer hold.

■ the high set point (I>>) offers only the definite time (DT) setting.
The minimum setting results in instantaneous operation (ANSI 50).

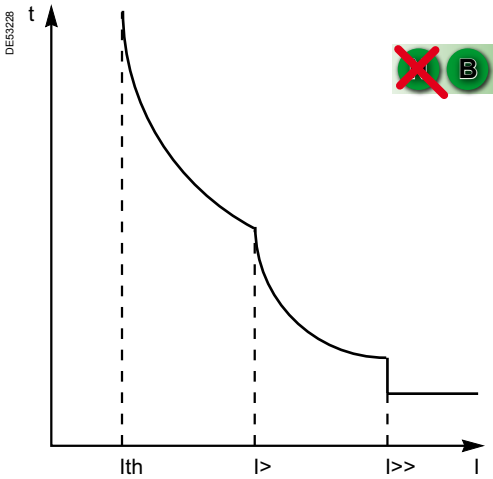

Thermal image overload protection (ANSI 49 RMS)

This protection function is used to protect cables and HV/LV transformers against overloads, based on measurement of the current drawn.

The function is based on a thermal model which calculates the temperature rise from current measurements. The current measured is an RMS 3-phase current which takes into account harmonics up to number 13.

Two protection settings

■ the continuous maximum permissible current setting which corresponds to the maximum thermal withstand of the protected devices (the continuous permissible current corresponds to a temperature rise of 100 %).

■ the setting for the equipment heating and cooling time constant.

Protection and measurement functions

Phase-overcurrent and earth-fault protection cold load pick-up

The desensitization function avoids nuisance tripping during energizing operations, particularly following a long outage. It temporarily raises the protection set point.

High currents during energization may be due to:
- simultaneous energizing of all loads in an installation (air conditioning, heating, etc.)
- magnetizing currents in power transformers (these currents can saturate the phase-current sensors and create a false residual current on the secondary of the sensors)
- motor starting currents.

Protection function	Mode of action
Phase-overcurrent protection	After circuit-breaker closing, the tripping set points (I> or I>>) are increased or disabled for the set time.
Earth-fault protection	After circuit-breaker closing, the tripping set points (Io> or Io>>) are increased or disabled for the set time. Or This protection is restrained by sensor saturation detection (H2 measurement) (1)

(1) Setting not available with Sepam series 10 N.

Logic discrimination (ANSI 68)

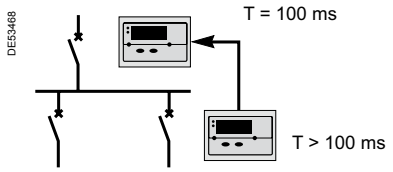

Logic discrimination ensures tripping within 100 ms for a fault affecting the substation busbars, while maintaining discrimination with the feeders.

This function provides:
- perfect tripping discrimination with phase-to-phase and phase-to-earth short-circuits, on all types of network
- faster tripping of the breakers closest to the source.

All Sepam series 10 relays (N, B and A) can send a blocking signal when a fault is detected by the phase-overcurrent and earth-fault protection functions.

Only the Sepam series 10 A relays can receive blocking signals which inhibit protection tripping. A saving mechanism (exclusive Sepam function) ensures back-up protection in the event of a blocking link failure.

External tripping

A Sepam series 10 A can receive, via a logic input, a tripping order from an external protection device.

Earth-fault current

This function displays the value of the fundamental of the earth-fault current.

For this measurement and for earth-fault protection (ANSI 50N/51N), the zero-sequence input must be connected either to the common point of the three phase CTs or to one earth-fault protection CT or to a CSH120, CSH200 or GO110 core balance CT.

Phase currents

This function displays the rms phase-current values and takes into account harmonics up to order 13. On Sepam series 10•4••, this function displays the three phase currents. On Sepam series 10•3••, only the A and C phases are connected and displayed.

Peak demand currents

This function displays the greatest average current on each of the three phases and indicates the current absorbed by peak loads.

Control and monitoring

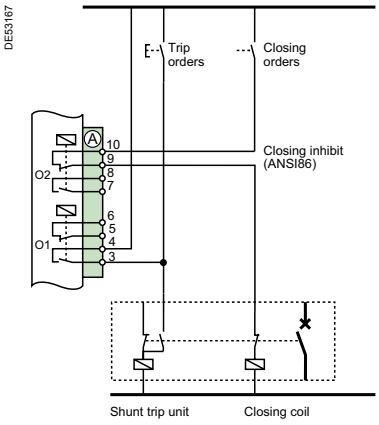

Circuit-breaker control with a Sepam series 10B or N.

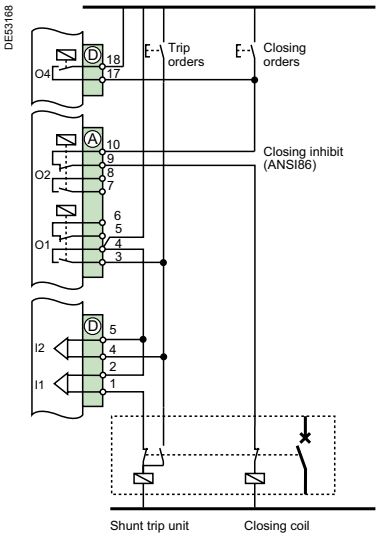

Circuit-breaker control with a Sepam series 10A.

Circuit breaker tripping and lockout (ANSI 86)

Sepam can be used in all types of circuit-breaker control systems.

Functions of the output relays

Relay outputs	Standard assignment
O1	Circuit-breaker tripping
O2	Closing inhibited
O3	Tripping indication

Trip-circuit supervision

This function continuously monitors the trip circuit to make sure that it has not been interrupted. The system shown opposite runs a low current through the trip circuit. Sepam checks that the current is effectively present.

Remote circuit-breaker control

The circuit breaker can be remotely controlled via the communication system. A Sepam logic input is used to select the operating mode (local or remote).

Record of last fault

Displays the characteristics of the last fault. Sepam indicates the fault source, the value of the three phase currents and the earth current at the time of tripping.
The information is stored in memory until the next fault.

Origin of recorded faults : I>, I>>, Io>, Io>> and thermal overload protection.

Record of last five events

Displays the characteristics of the last five events. For each event, Sepam indicates the fault source, the value of the three phase currents and the earth current at the time of the event and the date and time of the event.
The events are numbered in order of occurrence and the last five are memorized.

Recorded events:

- tripping due to I>, I>>, Io>, Io>>, thermal overload protection
- tripping via input signal from external device
- fault in tripping circuit
- circuit-breaker opening and closing initiated by communication
- tripping due to I>, I>>, Io> or Io>> (logic discrimination back-up)

Communication

Sepam series 10 A relays are equipped with an RS485 communication port.

The desired protocol (two available) must be set up in the parameters:

Modbus, IEC 60870-5-103.

Communication can be used for a number of functions:

- reading of measurements
- reading of status conditions
- reading of time-stamped measurements and events (two tables containing 100 events are available)
- time setting and synchronisation
- transmission of remote controls

Operating language

On delivery, the default language is English. The languages that may be selected are UK English, US English, French, German, Italian, Portuguese, Spanish and Turkish.

Operating diagram

Sepam series 10 N

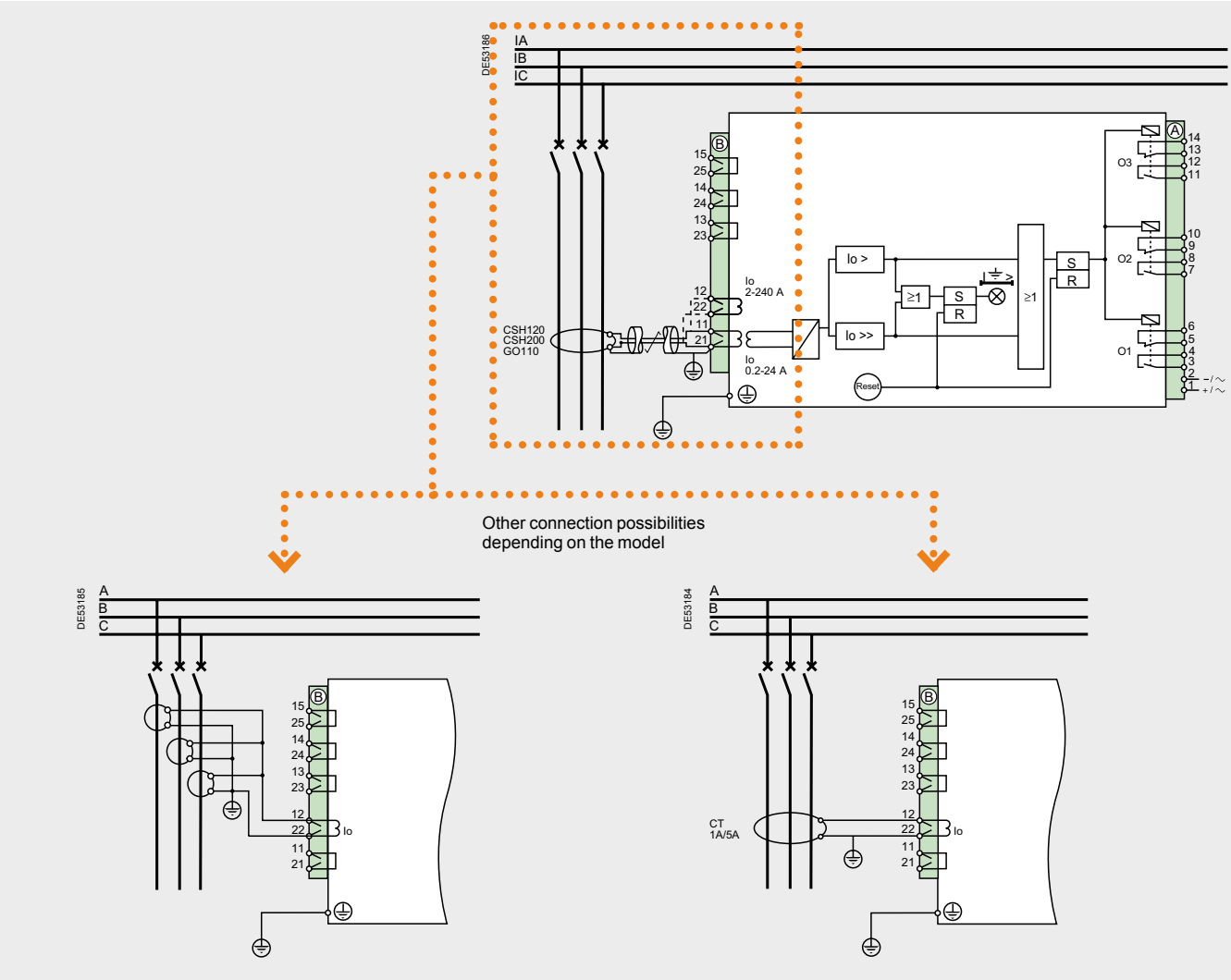

Relay outputs	Standard assignment	Customization via parameter settings
O1	Circuit breaker tripping	YES
O2	Circuit breaker lockout	YES
O3	Tripping indication	YES

Operating diagram

Sepam series 10 B

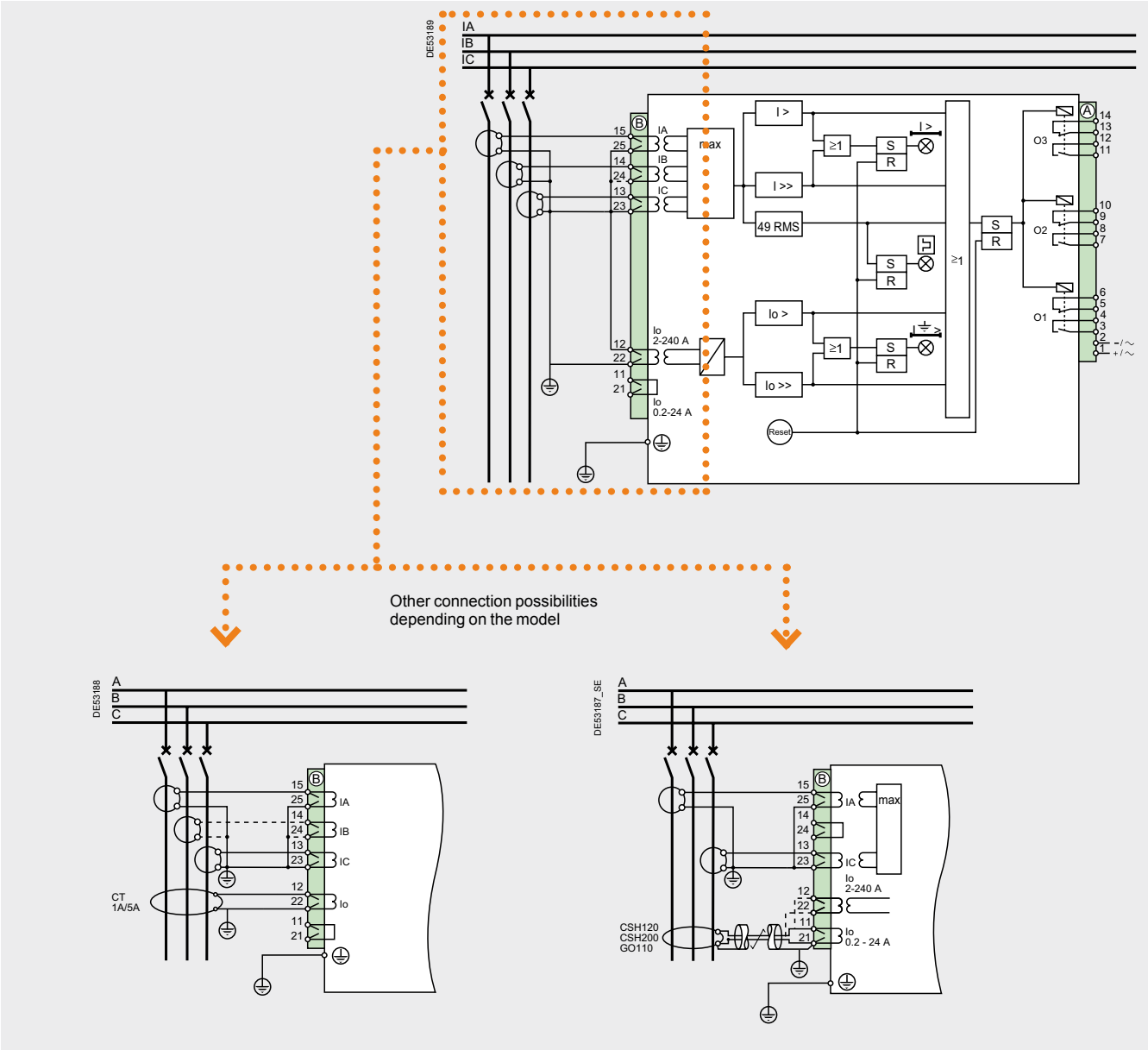

Relay outputs	Standard assignment	Customization via parameter settings
O1	Circuit breaker tripping	YES
O2	Circuit breaker lockout	YES
O3	Tripping indication	YES

Operating diagram

Sepam series 10 A

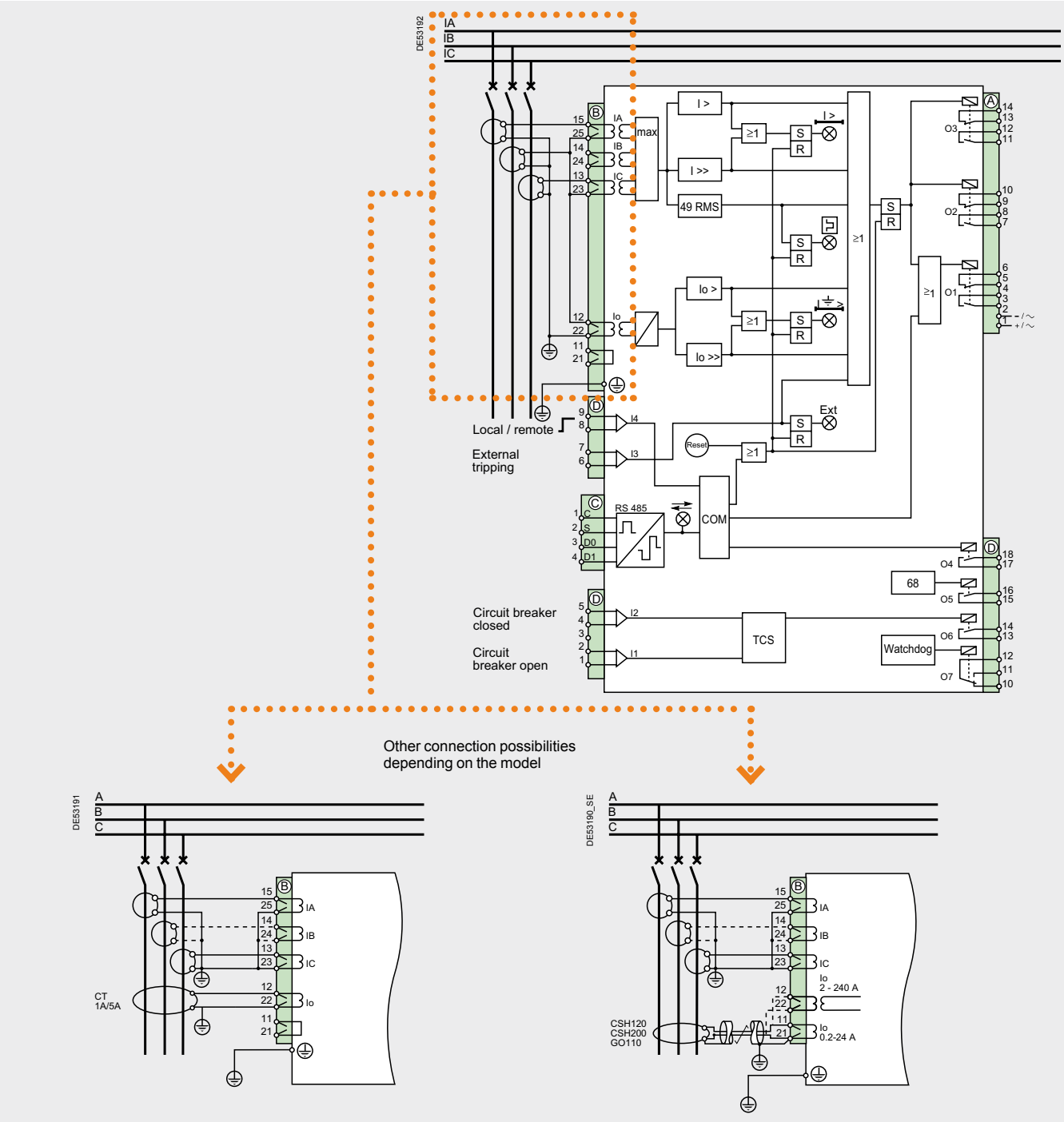

Logic inputs	Standard assignment	Customization via parameter settings
I1	Circuit breaker open	NO
I2	Circuit breaker closed	NO
I3	External tripping	YES
I4	Local / remote	YES
Relay outputs	**Standard assignment**	**Customization via parameter settings**
O1	Circuit breaker tripping	YES
O2	Circuit breaker lockout	YES
O3	Tripping indication	YES
O4	Circuit breaker closing by remote control	NO
O5	Blocking send	YES
O6	Indication of trip circuit fault (TCS)	YES
O7	Watchdog	NO

Connection to Sepam series 10

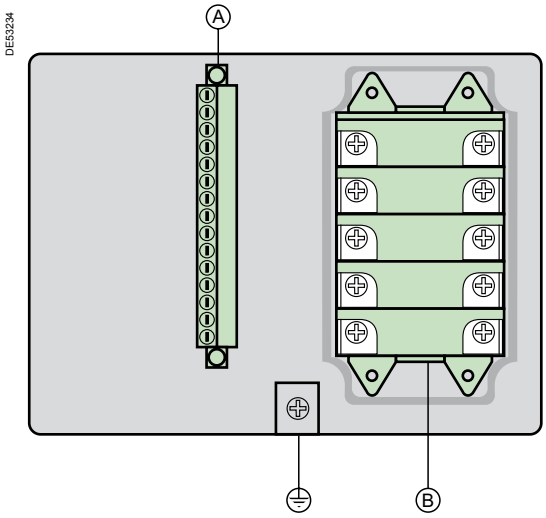

Sepam series 10 N and 10 B.

Connector A: supply and logic outputs 01 to 03

Diagram	Terminals	Signals
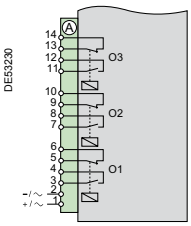	1-2	Auxiliary power supply
	3-4 and 5-6	Logic output O1
	7-8 and 9-10	Logic output O2
	11-12 and 13-14	Logic output O3

Connector B: inputs for phase and earth-fault currents

Diagram	Terminals	Signals
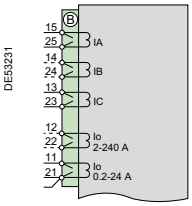	13-15, 23-25	Phase-current inputs
	12-22	Input for earth-fault current Io ■ for standard and sensitive earth-fault protection ■ for high sensitivity earth-fault protection (rating 2...240 A)
	11-21	Input for earth-fault current Io, only for high sensitivity earth-fault protection (rating 0.2..24 A)

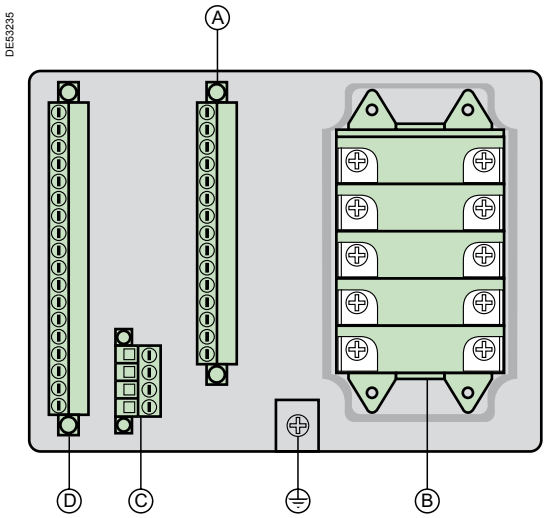

Sepam series 10 A.

Connector C : 2-wire RS485 communication port

Diagram	Terminals	Signals
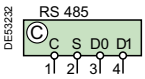	1	Common
	2	Shielding
	3	D0 communication - negative polarity (A)
	4	D1 communication - positive polarity (B)

Connector D: additional logic inputs/outputs

Diagram	Terminals	Signals
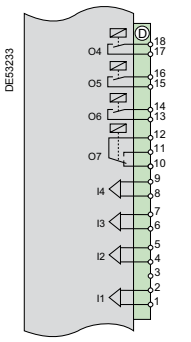	1-2, 4-5, 6-7, 8-9	Independent logic inputs
	10-11-12	Logic output O7: watchdog
	13-14, 15-16, 17-18	Logic outputs: normally open contact

Wiring

Identification	Type of terminal	Wiring
Ⓑ	Screw, 4 mm (0.16 in)	1…6 mm² (AWG 18…10) - 2 lugs maximum
Ⓐ, Ⓒ et Ⓓ	Screw clamp, 3 mm (0,12 in)	■ 1 wire: 0,2...2.5 mm² (AWG 24...12) ■ 2 wires: 0.2...1 mm² (AWG 24...18)
⏚	Screw, 4 mm (0,16 in)	6 mm² green/yellow wire (AWG 10)

Protection functions

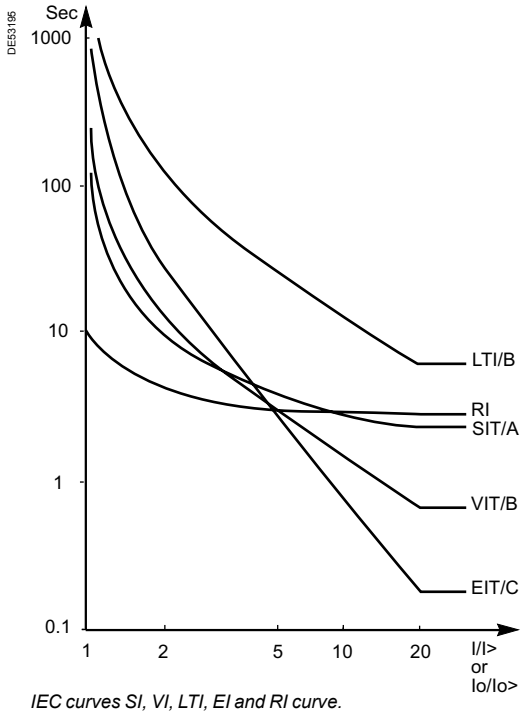

IEC curves SI, VI, LTI, EI and RI curve.

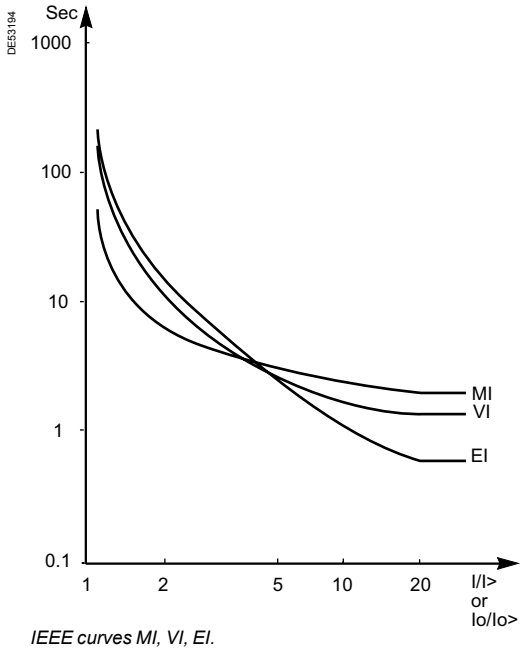

IEEE curves MI, VI, EI.

Protection function 50/51, 50N/51N

Tripping curve

- DT: Definite time
- SIT/A: IEC standard inverse
- VIT/B: IEC very inverse
- LTI/B: IEC long-time inverse
- EIT/C: IEC extremely inverse
- MI/D: IEEE moderately inverse
- VI/E: IEEE very inverse
- EI/F: IEEE extremely inverse
- RI

I>, I>> set points			
DT curve			0.1...24 In (minimum: 1 A)
IDMT curves			0.1...2,4 In (minimum: 1 A)
Accuracy			±5 % or ±0.02 In
Drop out/pick up ratio			95 %
Transient overshoot			< 10 %
Io>, Io>> set points			
DT curve	Standard version		Setting range: 0.1…24 Ino (minimum: 1 A)
	Sensitive version		Setting range: 0.01…2.4 Ino (minimum: 0.1 A)
	High sensitivity version	Rating 0.2…24 A	Setting range: 0.0004…0.05 Ino (Ino = 470 A)
		Rating 2.0…240 A	Setting range: 0.004…0.5 Ino (Ino = 470 A)
IDMT curves	Standard version		Setting range: 0.2…2.4 Ino (minimum: 1 A)
	Sensitive version		Setting range: 0.01…0.24 Ino (minimum: 0.1 A)
	High sensitivity version	Rating 0.2…24 A	Setting range: 0.0004…0.005 Ino (Ino = 470 A)
		Rating 2.0…240 A	Setting range: 0.004…0.05 Ino (Ino = 470 A)
Accuracy			±5 % ou ±0.02 Ino
Drop out/pick up ratio			95 %
Transient overshoot			< 10 %
Time delay			
DT curve			0.05...300 s
IEC, RI curves			TMS: 0.02...2 (step: 0.01)
IEEE curve			TD: 0.5...15 (step: 0.1)
Accuracy			DT curve: ±2% or ±20 ms IDMT curves: ±5% or ±20 ms
Timer hold			Selection: ON/OFF. Common setting for I> and Io> set points
Accuracy			±2 % or ±20 ms
Characteristic times			
Operation time			< 40 ms at 2 x set point (typically 25 ms)
Overshoot time			< 40 ms at 2 x set point
Reset time			< 50 ms at 2 x set point

Protection function 49RMS

Set points		
Alarm set point	Setting range	50...100 % of permissible thermal capacity
Trip set point	Setting range	0.1...2.4 In (value of permissible current)
	Accuracy	±5 % or ±0,02 In
	Drop out/pick up ratio	95 %
Time delay		
Time constant	Setting range	1...120 mn in 1 mn. steps
	Tripping-time accuracy	±2 % or ±2 s

Measurements

Measured characteristic		Value
Rms phase current and peak demand currents	Measurement range	0.1 In...1.5 In
	Accuracy	±1 % typical at In ±2 % 0,3 In... 1.5 In ±5 % 0.1 In...0.3 In
Earth-fault current	Range for standard version	0.1 Ino...1.5 Ino (or In)
	Range for sensitive version	0.01 Ino...1.5 Ino (or In)
	Range for high sensitivity version	0.25...24 A primary or 2.5...240 A primary Depending on the rating
	Accuracy	±1 % typical at Ino (or In) ±2 % 0.3 Ino...1.5 Ino (or In) ±5 % 0.005 Ino...0.3 Ino (or In)
Phase tripping currentt	Measurement range	0.1 In...40 In
	Accuracy	±5 %
Earth-fault tripping current	Range for standard version	0.1 Ino...40 Ino (or In)
	Range for sensitive version	0.01 Ino...4 Ino (or In)
	Range for high sensitivity version	0.2...40 A primary or 2...400 A primary Depending on the rating
	Accuracy	±5 %

Electrical characteristics

Current inputs	Characteristics	Conditions	Value
Current transformer: ■ primary: 1…6300 A ■ secondary: 1 A or 5 A	Consumption	at 1 A	< 0.004 VA
		at 5 A	< 0.1 VA
	Continuous thermal withstand	-	4 In
	Overload as per IEC 60255-6	1 s	100 In
		3 s	40 In
CSH120, CSH200 or GO110 core balance CT	Continuous thermal withstand	-	300 A
	Overload as per IEC 60255-6	1 s	20 kA

Logic inputs	Characteristics	Applicable to	DC value	AC value
Sepam series 10 A, I1 to I4	Maximum voltage	series 10 • •• A	125 V +20 %	120 V +20 %
		series 10 • •• E	250 V +20 %	240 V +20 %
		series 10 • •• F	250 V +20 %	-
	Frequency	series 10 • •• •	-	47…63 Hz
	Typical switching threshold	series 10 • •• A	14 V	12 V
		series 10 • •• E	82 V	58 V
		series 10 • •• F	154 V	-
	Typical consumption	series 10 • •• •	3 mA	3 mA

Relay outputs	Characteristics	Conditions	DC value	AC value
Control relay outputs Sepam series 10 B and N, O1…O3 Sepam series 10 A, O1…O4	Maximum voltage	-	250 V +20 %	240 V +20 %
	Frequency	-	-	47…63 Hz
	Rated current	-	5 A	
	Breaking capacity	Resistive load	4 A/24 V 4 A/48 V 0,7 A/127 V 0,3 A/220 V	5 A/100…240 V
		Load L/R < 40 ms	5 A/24 V 1 A/48 V 0,1 A/220 V	-
		Load cos φ > 0,3	-	5 A/100…240 V
	Making capacity and withstand 200 ms	ANSI C37.90, clause 6.7	30 A, 2000 cycles	
Indication relay output Sepam series 10 A, O5...O7	Maximum voltage	-	250 V +20 %	240 V +20 %
	Frequency	-	-	47…63 Hz
	Rated current	-	2 A	
	Breaking capacity	Load L/R < 20 ms	2 A/24 V 1 A/48 V 0.5 A/127 V 0.15 A/220 V	-
		Load cos φ > 0,3	-	1 A/100…240 V

Serial link	Characteristics
Sepam series 10 A only	2-wire RS485

Auxiliary power supply

Sepam must be supplied with AC or DC power.
It is protected against reversed polarity. The supply voltage depends on the Sepam version.

	Sepam series 10 x xx A		Sepam series 10 x xx E		Sepam series 10 x xx F	
	DC	AC	DC	AC	DC	AC
Rated voltage	24…125 V ±20 %	100…120 V ±20 %	110…250 V ±20 %	100…240 V ±20 %	220…250 V ±20 %	-
Typical consumption	3 VA					
Maximum consumption	8 VA					
Inrush current	< 20 A for 100 µs					
Acceptable momentary outages	IEC 60255-11 class A : 100 %; 100 ms ; (3 relays excited)					

Environmental characteristics

Electromagnetic compatibility	Standard	Level / Class	Value
Tests			
Overall	IEC 60255-26	A	-
	EN 50263	-	-
Radiated emission	CISPR22	A	-
	EN 55022	A	-
	IEC 60255-25	-	-
Conducted emission	CISPR22	A	-
	EN 55022	A	-
	IEC 60255-25	-	-
Immunity tests – Radiated disturbances			
Radiated RF fields	IEC 60255-22-3	-	10 V/m ; 80…1000 MHz ; 1.4...2.7 GHz
	IEC 61000-4-3	3	10 V/m ; 80…2000 MHz
	ANSI C37.90.2 (2004)	-	20 V/m ; 80…1000 MHz
Electrostatic discharges	IEC 60255-22-2	-	8 kV air ; 6 kV contact
	IEC 61000-4-2	3	8 kV air ; 6 kV contact
	ANSI C37.90.3	-	8 kV air ; 6 kV contact
Magnetic field at power frequency	IEC 61000-4-8	4	30 A/m (continuous) 100 A/m (for 1...3 s)
Immunity tests – Conducted disturbances			
Conducted RF disturbances	IEC 61000-4-6	3	10 V ; 0.15...80 MHz
	IEC 60255-22-6	-	
Fast transient bursts	IEC 60255-22-4		4 kV CM (1) ; 5 kHz
	IEC 61000-4-4	4	
	ANSI C37.90.1	-	4 kV ; CM (1) and DM (2), 5 kHz
Damped oscillatory wave	IEC 60255-22-1	-	2.5 kV DM (2) 1 kV DM (2) 100 kHz and 1 MHz
	IEC 61000-4-18	3	
	ANSI C37.90.1	-	2.5 kV CM (1) and DM (2)
Surges	IEC 60255-22-5	-	1.2/50 µs ; 10/700 µs ; 2 kV CM (1); 1 kV DM (2)
	IEC 61000-4-5	3	
Power frequency for status inputs	IEC 60255-22-7	-	300 V CM (1) ; 150 V DM (2)
	IEC 61000-4-16	4	
Safety			
Safety tests			
General	IEC 60255-27	-	-
Dielectric withstand at power frequency	IEC 60255-5 IEC 60255-27	-	2 kV 1 mn: logic input/outputs and supply, RS485 port
	ANSI C37.90	-	1.5 kV ; 1 mn between open contacts
Surges 1.2/50 µs	IEC 60255-5 IEC 60255-27		5 kV for logic inputs and outputs 3 kV for RS485 port
Insulation resistance	IEC 60255-27	-	500 V CM (1) and DM (2) R > 100 MΩB ; R > 10 MΩA

(1) CM : common mode
(2) DM : differential mode

Environmental characteristics

Climatic withstand	Standard	Level / Class	Value
In operation			
Exposure to cold	IEC 60068-2-1	Ad	-40 °C (104 °F) ; 96 h
Exposure to dry heat	IEC 60068-2-2	Bd	+70 °C (158 °F) ; 96 h
Exposure to damp heat	IEC 60068-2-78	Cab	93 % HR ; 40 °C ; 56 days
Salt mist	IEC 60068-2-52	Kb/2	3 cycles of 24 hours each
Corrosive atmosphere / 2 gas test	IEC 60068-2-60	Ke	21 days ; 75 % HR ; 25 °C (77 °F) ; 0.5 ppm H_2S ; 1 ppm SO_2
Storage in original packaging			
Exposure to cold	IEC 60068-2-1	-	-40 °C (104 °F) ; 96 h
Exposure to dry heat	IEC 60068-2-2	Bd	+70 °C (158 °F) ; 96 h
Exposure to damp heat	IEC 60068-2-78	Cab	93 % HR ; 40 °C ; 56 days
Temperature variation	IEC 60068-2-14	Nb	5 °C/mn at -40...+70 °C (-40...+158 °F)
Mechanical robustness			
In operation			
Vibrations	IEC 60255-21-1	2	1 Gn ; 10...150 Hz ; 1 cycle
Shocks	IEC 60255-21-2	2	10 Gn for 11 ms
Earthquakes	IEC 60255-21-3	2	2 Gn horizontal, 1 Gn vertical
De-energized			
Vibrations	IEC 60255-21-1	2	2 Gn ; 10...150 Hz ; 20 cycles
Shocks	IEC 60255-21-2	2	30 Gn for 11 ms
Bumps	IEC 60255-21-2	2	20 Gn for 16 ms
Enclosure protection			
Front panel	IEC 60529	IP54	-
	NEMA 250	Type 12	-
Rear panel	IEC 60529	IP40	-
Shocks	IEC 62262	IK7	2 Joules
Fire resistance	IEC 60695-2-11	-	650 °C

Certification	Standard		Reference document
CE	Harmonized standard: EN 50263		Directives and amendments: ■ 89/336/EEC Electromagnetic Compatibility (EMC) Directive □ 92/31/EEC Amendment □ 93/68/EEC Amendment ■ 73/23/EEC Low-Voltage Directive □ 93/68/CEE Amendment
UL	UL508		Consult us
CSA	CSA C22.2		Consult us

User-machine interface and dimensions

User-machine interface

1 Back-lit display
2 Status LEDs
3 Fault LEDs
4 Button for Sepam reset and maximeter reset
5 Battery housing (Sepam series 10 A)
6 Protection cover for settings
7 Identification zone
8 Lead-seal accessory
9 Button for setting selection and confirmation
10 Buttons for selection in a menu
11 Button to cancel entry
12 Buttons for setting adjustments
13 Button for menu selection and LED test
14 Menu pictograms
15 Cursor for menu selection

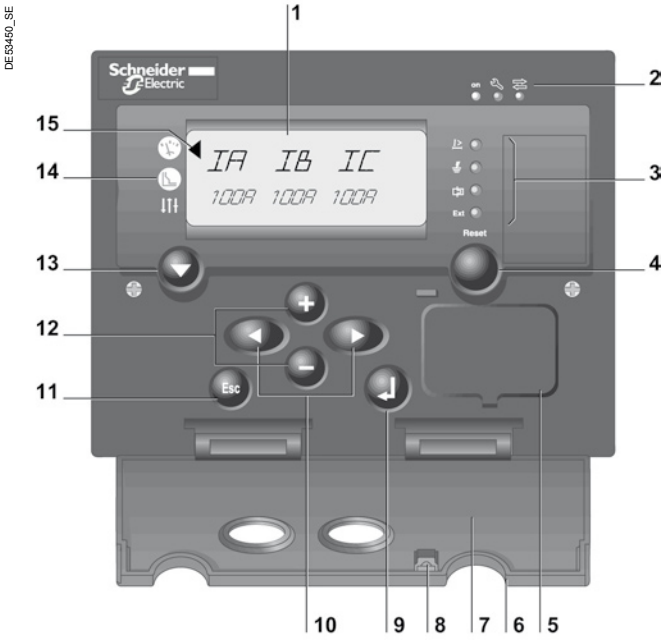

Dimensions

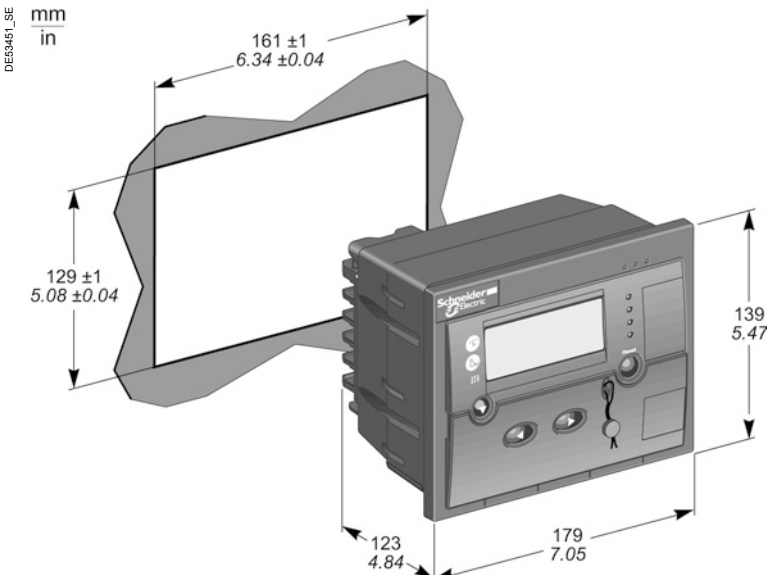

Characteristics	Applicable to	Value
Dimensions	series 10 • •• •	180 x 140 x 90 mm / 7.09" x 5.51" x 3.54"
Weight depending on number of current inputs	series 10 N 1• • series 10 B 3• • series 10 A 4• •	1.15 kg/2.53 pounds 1.26 kg/2.78 pounds 1.46 kg/3.22 pounds
Type of battery	series 10 A •• •	1/2 AA Li 3.6 V

Core balance CTs CSH120, CSH200, GO110

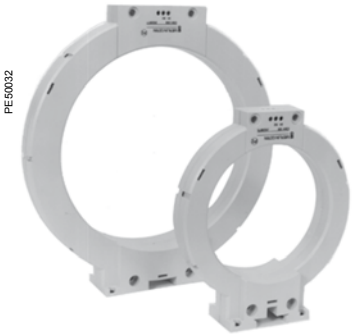

Core balance CTs CSH120 and CSH200.

Function

The specifically designed CSH120 and CSH200 core balance CTs are used for direct residual current measurement. The only difference between them is the diameter. Due to their low voltage insulation, they may be used only on cables with earthed shielding.

Characteristics

	CSH120	CSH200	GO110
Inner diameter	120 mm (4.7 in)	200 mm (7.9 in)	110 mm (4.33 in)
Weight	0.6 kg (1.32 lb)	1.4 kg (3.09 lb)	3.2 kg (7.05 llb)
Accuracy	±5 % à 20 °C (68 °F)		< 0,5 % (10...250 A)
	±6 % max. from -25 °C to 70 °C (-13 °F to +158 °F)		< 1,5 % (10...250 A)
Transformation ratio	1/470		
Maximum permissible current	20 kA - 1 s		
Operating temperature	-25 °C to +70 °C (-13 °Fto +158 °F)		
Storage temperature	-40 °C to +85 °C (-40 °F to +185 °F)		

GO110 dimensions

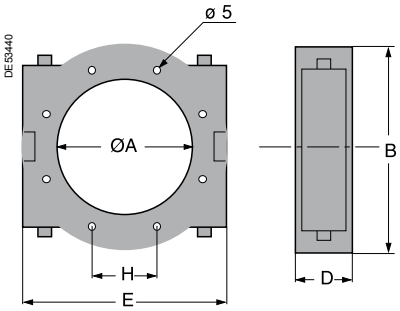

CSH120 and CSH200 dimensions

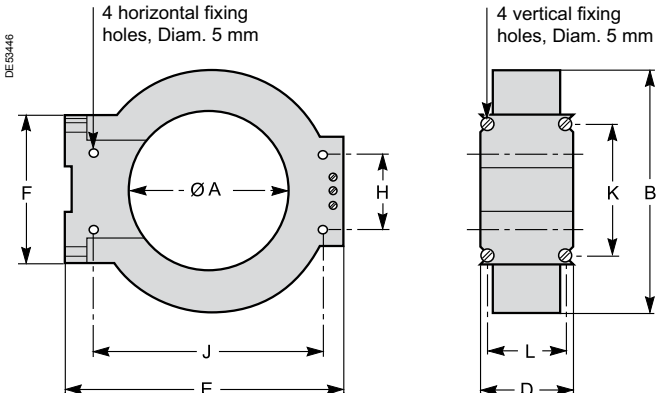

Dimensions		A	B	D	E	F	H	J	K	L
CSH120	***mm***	120	164	44	190	76	40	166	62	35
	in	*4.72*	*6.46*	*1.73*	*7.48*	*2.99*	*1.57*	*6.54*	*2.44*	*1.38*
CSH200	***mm***	200	256	46	274	120	60	257	104	37
	in	*7.87*	*10.1*	*1.81*	*10.8*	*4.72*	*2.36*	*10.1*	*4.09*	*1.46*
GO110	***mm***	*110*	*110*	*72*	*148*	-	*57*	-	-	-
	in	*4.33*	*4.33*	*2.83*	*5.83*		*2.24*			

Catalogue numbers

Sepam series 10		
Type	**Cat. no**	**Quantity**
Sepam series 10 N 11 A	REL59817	
Sepam series 10 N 11 E	REL59819	
Sepam series 10 N 13 A	REL59818	
Sepam series 10 N 13 E	REL59820	
Sepam series 10 B 31 A	REL59800	
Sepam series 10 B 31 E	REL59801	
Sepam series 10 B 41 A	REL59802	
Sepam series 10 B 41 E	REL59805	
Sepam series 10 B 42 A	REL59803	
Sepam series 10 B 42 E	REL59806	
Sepam series 10 B 43 A	REL59804	
Sepam series 10 B 43 E	REL59807	
Sepam series 10 A 41 A	REL59808	
Sepam series 10 A 41 E	REL59811	
Sepam series 10 A 41 F	REL59814	
Sepam series 10 A 42 A	REL59809	
Sepam series 10 A 42 E	REL59812	
Sepam series 10 A 42 F	REL59815	
Sepam series 10 A 43 A	REL59810	
Sepam series 10 A 43 E	REL59813	
Sepam series 10 A 43 F	REL59816	
Replacement parts		
Type	**Cat. no**	**Quantity**
CCA 680 set of spare connectors	REL59798	
Core balance CTs		
Type	**Cat. no**	**Quantity**
Split core balance CTs, dia. 110 mm	GO110 50134	
Core balance CTs, dia. 120	CSH120 59635	
Core balance CTs, dia. 200	CSH200 59636	

A Sepam series 10 catalogue number comprises different elements:

Sepam series 10 X X X X

Range Sepam series 10

Model

Earth-fault protection		N
Phase-overcurrent and earth-fault protection		B
Phase-overcurrent and earth-fault protection, logic inputs and communication port		A

Number of current inputs

1 earth-fault input		1
2 phase-current inputs + 1 earth-fault input		3
3 phase-current inputs + 1 earth-fault input		4

Sensitivity of earth-fault protection

Standard (0.1…24 Ino) (1)		1
Sensitive (0.01…2,4 Ino) (1)		2
High sensitivity (0.2…24 A and 2…240 A) (2)		3

Supply voltage

24…125 V DC and 100…120 V AC		A
110…250 V DC and 100…240 V AC		E
220…250 V DC and high-threshold logic inputs		F

(1) Uses 1 A/5 A sensors.
(2) Uses CSH CTs.

Notes

Notes

Schneider Electric Industries SAS
89, boulevard Franklin Roosevelt
F - 92505 Rueil-Malmaison Cedex (France)
Tel : +33 (0)1 41 29 85 00
http://www.schneider-electric.com

As standards, specifications and designs change from time to time, please ask for confirmation of the information given in this publication.

Printed on recycled paper.

Design:
Publication: Schneider Electric
Printed:

SEPED307026EN / 1

12/2008